FITTING INSTRUCTIONS FOR LP0398 LICENCE PLATE BRACKET



This kit contains the items pictured and labelled over page.

Some parts may be shown for clarity of instructions only.

Do not proceed until you are sure all parts are present.

Please read all instructions before proceeding.

IF IN ANY DOUBT WHEN FITTING OUR PRODUCTS, CONSULT ONE OF OUR DEALERS OR HAVE FITTED BY A QUALIFIED TECHNICIAN.

Please note that the way the kit is packed does not necessarily represent the way of mounting to the bike.

In the event of rubber washers being used to hold components onto bolts, these rubber washers can be thrown away.

Racing Technique Ltd T/A R&G
Unit 1, Shelley's Lane, East Worldham, Alton, Hampshire, GU34 3AQ
Tel: +44 (0)1420 89007 www.rg-racing.com Email: info@rg-racing.com

TOOLS REQUIRED	**GENERAL TORQUE SETTINGS**
• Set of metric Hex keys to include 4mm. • Set of metric sockets and wrench. To include 8mm, 10mm & 12mm. • Cable cutters	M4 BOLT = 8Nm M5 BOLT = 12Nm M6 BOLT = 15Nm M8 BOLT = 20Nm M10 BOLT = 40Nm M12 BOLT = 40Nm

LEGEND

ITEM No.	DESCRIPTION	QTY
ITEM 1	MAIN MOUNTING BRACKET (TB0398 PART 1)	1
ITEM 2	LICENCE PLATE LIGHT LA0002 has been replaced by LA0012. Refer to kit LA0012 for the QR Code for assembly instructions	1
ITEM 3	COVER PLATE (TB0398 PART 3)	1
ITEM 4	NUMBER PLATE LIGHT (LA0002)	1
ITEM 5	M5 x 0.8 x 16mm BOLT	3
ITEM 6	M5x10mm WASHER	3
ITEM 7	M5x0.8 NUT	3
ITEM 8	INDICATOR ADAPTOR (I0037)	2
ITEM 9	LICENSE PLATE LIGHT CONNECTOR (CON077)	1
ITEM 10	100mm CABLE TIE (CT100)	1
ITEM 11	HEAT SHRINK (666-896/15)	1
ITEM 12	REFLECTOR (REF3)	1

Assembly Diagram

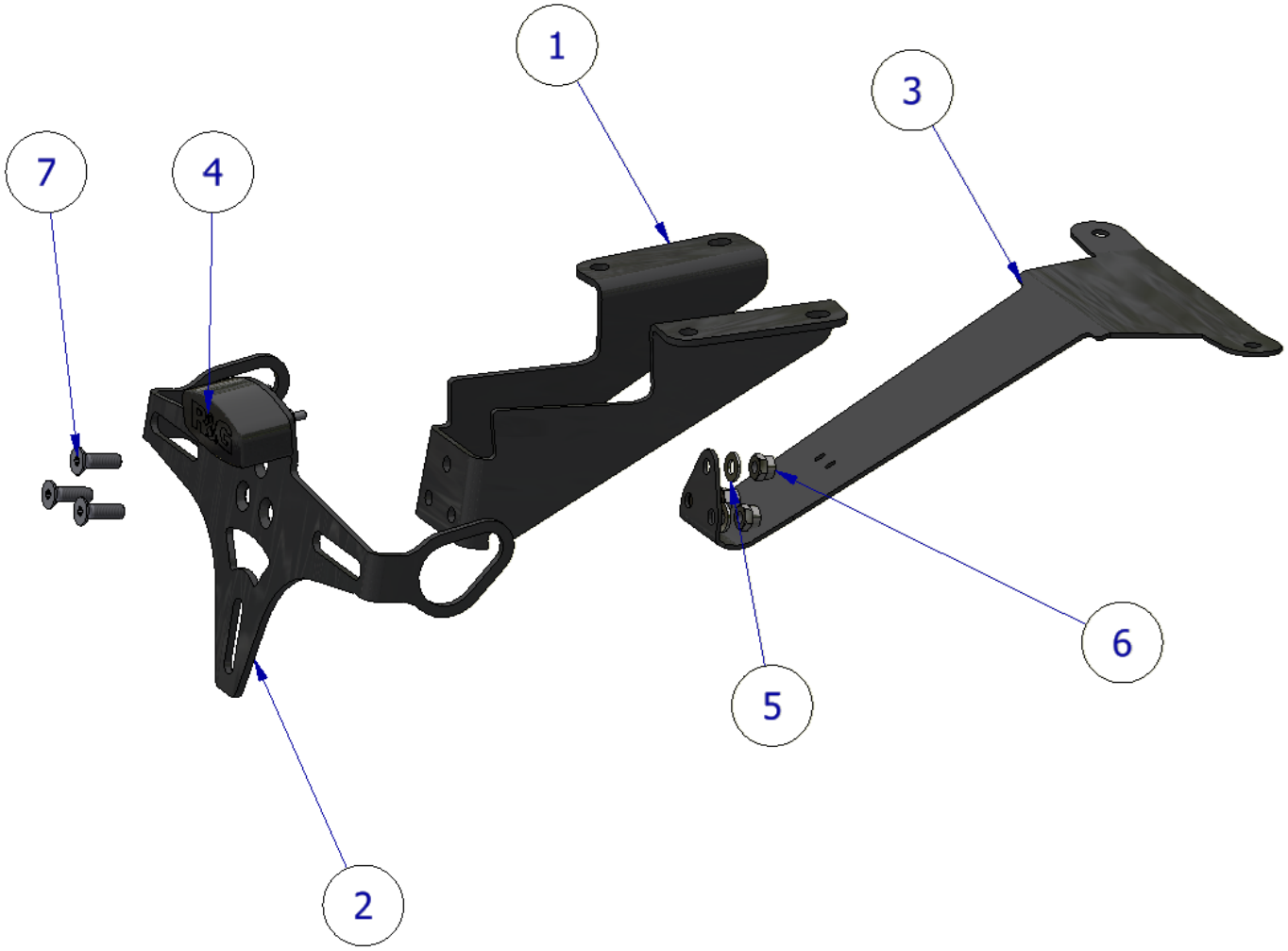

FITTING PICTURES

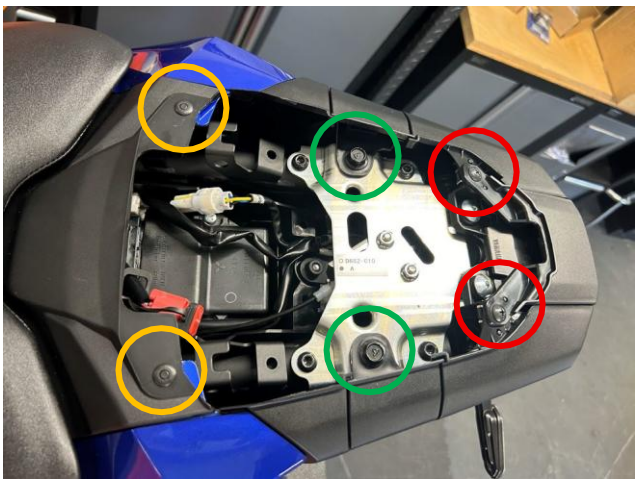

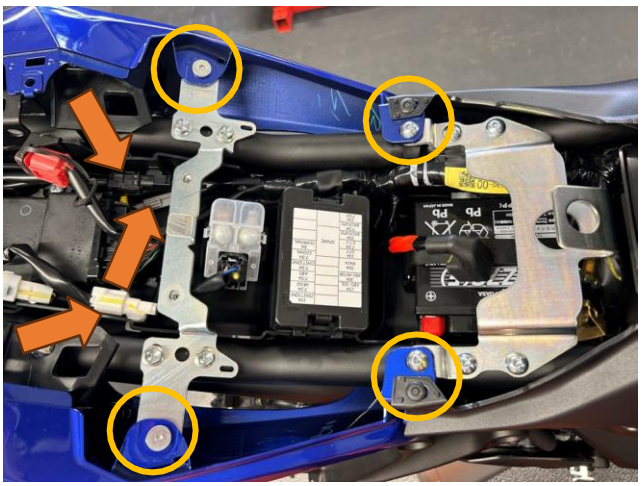

Racing Technique Ltd T/A R&G
Unit 1, Shelley's Lane, East Worldham, Alton, Hampshire, GU34 3AQ
Tel: +44 (0)1420 89007 www.rg-racing.com Email: info@rg-racing.com

PICTURE 1

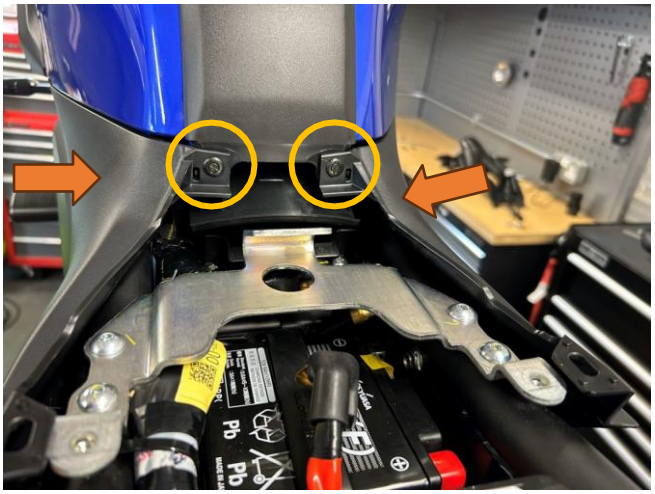

PICTURE 2



PICTURE 3

PICTURE 4

FITTING GUIDE

Disassembly Instructions:

- Remove the OEM rear seat and any tools etc from the storage compartment.
- Remove the plastic panel between the main & passenger seat by removing the 2 poppers circled in orange in **Picture 1**, then remove the main seat.
- Remove the bolts circled in green in **Picture 1**.
- Remove the 2 screws circled in red in **Picture 1**. This will allow you to remove the rear central panel above the brake light.
- Remove all fixings circled in orange in Pictures 2, 3 & 4. This will allow you to firstly remove the 2 black panels arrowed in Picture 3, then the 2 rear cowlings. Please note that there are 2 more silver bolts not shown that will need to be removed in order to remove the rear cowlings.
- Disconnect the 3 connectors arrowed in Picture 2.
- The OEM tail unit can then be removed by removing the 4x bolts securing it in place.
- Remove the indicators from the OEM tail unit.

Assembly Instructions:

- Using the supplied heat shrink, cover the number plate light wires.
- Then fit the licence plate light (**Item 4**) to the licence plate bracket (**Item 2**).
- Fit the OEM indicators in the same way they were mounted to the OEM tail unit, ensuring the wiring passes through the holes in the bottom side of the main bracket.
- As shown in the **assembly diagram**; bolt the licence plate mounting bracket through the main mounting bracket and cover plate using the supplied countersunk bolts (**Item 5**), washers (**Item 6**) and nyloc nuts (**Item 7**).

- The license plate light and indicator wires can then be secured in place using the cable tie and slot in the cover plate.
- Fit the license plate connector onto the end of the license plate light wires.

Fitting Instructions:

- While pushing the wiring through the undertray into the bike, hold the tail tidy assembly in place and, using the OEM bolts removed earlier, secure the tail tidy in place in the original mounting holes.
- Fully tighten the bolts to their required torque.
- Offer up the rear cowling panels removed earlier to the bike, ensuring the underside fits between the OEM undertray and the tail tidy cover plate, and secure in place in the manner they were removed, using the OEM poppers to fix the cover plate in place.
- Re-connect the OEM indicator connectors to the wiring loom.
- Refit all remaining OEM panels and the seats in the way they were removed.

IMPORTANT: FOR SAFETY, ENSURE THE LICENCE PLATE IS PLACED AS HIGH AS POSSIBLE ON THE TAIL TIDY (IT MAY REQUIRE DRILLING). IF FITTING A LICENCE PLATE OF 200MM OR LONGER (INCLUDING ANY SHROUD OR REFLECTOR ATTACHMENT) TO THE BRACKET, BEFORE RIDING, FULLY COMPRESS THE SUSPENSION TO ENSURE NO PART OF THE ASSEMBLY CAN CONTACT THE TYRE WHILE THE VEHICLE IS IN MOTION OR UNDER LOAD. IT IS YOUR RESPONSIBILITY TO CHECK FOR THIS POSSIBILITY AND TAKE AVOIDING ACTION. FAILURE TO CHECK THIS COULD RESULT IN SERIOUS INJURY OR DAMAGE TO THE MOTORCYCLE.

ISSUE 1 – 02/06/2025 (MH)

CONSUMER NOTICE

The catalogue description and any exhibition of samples are only broad indications of the Products and R&G may make design changes which do not diminish their performance or visual appeal and supplying them in such state shall conform to the order. The Buyer acknowledges no representation or warranty (other than as to title) has been given or will apply to the Products other than those in R&G's order or confirmation and the Buyer confirms it has chosen the Products as being of merchantable quality and suitable for its particular purposes. Where R&G fits the Products or undertakes other services it shall exercise reasonable skill and care and rectify any fault free of charge unless the workmanship has been disturbed. The Buyer is responsible for ensuring that the warranty on the motorcycle is not affected by the fitting of the Products. On return of any defective Products R&G shall at its option either supply a replacement or refund the purchase money but shall not be liable if the Products have been modified or used or maintained otherwise than in accordance with R&G's or manufacturer's instructions and good engineering practice or if the defect arises from accident or neglect. Other than identified above and subject to R&G not limiting its liability for causing death and personal injury, it shall not be liable for indirect or consequential loss and otherwise its liability shall be limited to the amounts paid by the Buyer for the Products or the fitting or service concerned. These terms do not affect the Buyer's statutory rights.

R&G RACING RETURNS POLICY (NON-FAULTY GOODS)

Returns must be pre-authorised (if not pre-authorised the return will be rejected). Goods may only be returned direct to us if they were purchased direct from us (customer must prove if necessary). Otherwise to be returned to original vendor. Goods must be in re-sellable condition, in the opinion of R&G Racing. All returns are subject to a 25% restocking and handling fee (25% of the gross value exc. P&P – at the prevailing price at time of purchase). The customer must pay any and all carriage charges. No returns of discontinued products, unless within 14 days of purchase. This policy does not affect your statutory rights and does not refer to faulty goods.

NOTICE DE MONTAGE LP0398 SUPPORT DE PLAQUE



CE KIT CONTIENT LES ARTICLES ILLUSTRES ET ETIQUETES SUR LA PAGE.

CERTAINES PARTIES PEUVENT ETRE PRESENTES UNIQUEMENT POUR LA CLARTE DES INSTRUCTIONS.

NE PAS PROCEDER AU MONTAGE TANT QUE VOUS N'ETES PAS SUR QUE TOUTES LES PIECES SOIENT PRESENTES.

VEUILLEZ LIRE TOUTES LES INSTRUCTIONS AVANT DE CONTINUER.

EN CAS DE DOUTE LORS DU MONTAGE DE NOS PRODUITS, CONSULTEZ UN DE NOS REVENDEURS OU FAITES APPEL A UN TECHNICIEN QUALIFIÉ.

VEUILLEZ NOTER QUE LA FAÇON DONT LE KIT EST EMBALLE NE REPRESENTE PAS NECESSAIREMENT LA MANIERE DE LE MONTER SUR LA MOTO.

SI DES RONDELLES EN CAOUTCHOUC SONT UTILISEES POUR MAINTENIR LES COMPOSANTS SUR LES BOULONS, ELLES PEUVENT ETRE JETEES.

NOTICE DISPONIBLE AU TELECHARGEMENT SUR :
WWW.RG-RACING.COM

Racing Technique Ltd T/A R&G
Unit 1, Shelley's Lane, East Worldham, Alton, Hampshire, GU34 3AQ
Tel: +44 (0)1420 89007 www.rg-racing.com Email: info@rg-racing.com

OUTILS REQUIS	**VALEURS DE SERRAGE**
• Clés Allen 4mm. • Clé à cliquet + douilles 8mm, 10mm & 12mm. • Coupe-câble	M4 BOULON = 8Nm M5 BOULON = 12Nm M6 BOULON = 15Nm M8 BOULON = 20Nm M10 BOULON = 40Nm M12 BOULON = 40Nm

LÉGENDE

ARTICLE No.	DESCRIPTION	QTÉ
ARTICLE 1	SUPPORT DE PLAQUE PRINCIPAL (TB0398 PART 1)	1
ARTICLE 2	SUPPORT DE PLAQUE (TB0398 PART 2)	1
ARTICLE 3	PLAQUE DE COUVERTURE (TB0398 PART 3)	1
ARTICLE 4	FEU DE PLAQUE LA0002 a été remplacé par LA0012. Consultez le kit LA0012 pour le code QR des instructions de montage.	1
ARTICLE 5	M5 x 0.8 x 16mm BOULON	3
ARTICLE 6	M5x10mm RONDELLE	3
ARTICLE 7	M5x0.8 ÉCROU	3
ARTICLE 8	ADAPTATEUR DE CLIGNOTANT (I0037)	2
ARTICLE 9	CONNECTEUR DE FEU DE PLAQUE (CON077)	1
ARTICLE 10	100mm COLLIER DE SERRAGE (CT100)	1
ARTICLE 11	MANCHON THERMO RÉTRACTABLE (666-896/15)	1
ARTICLE 12	RÉFLECTEUR (REF3)	1

Schéma d'ensemble

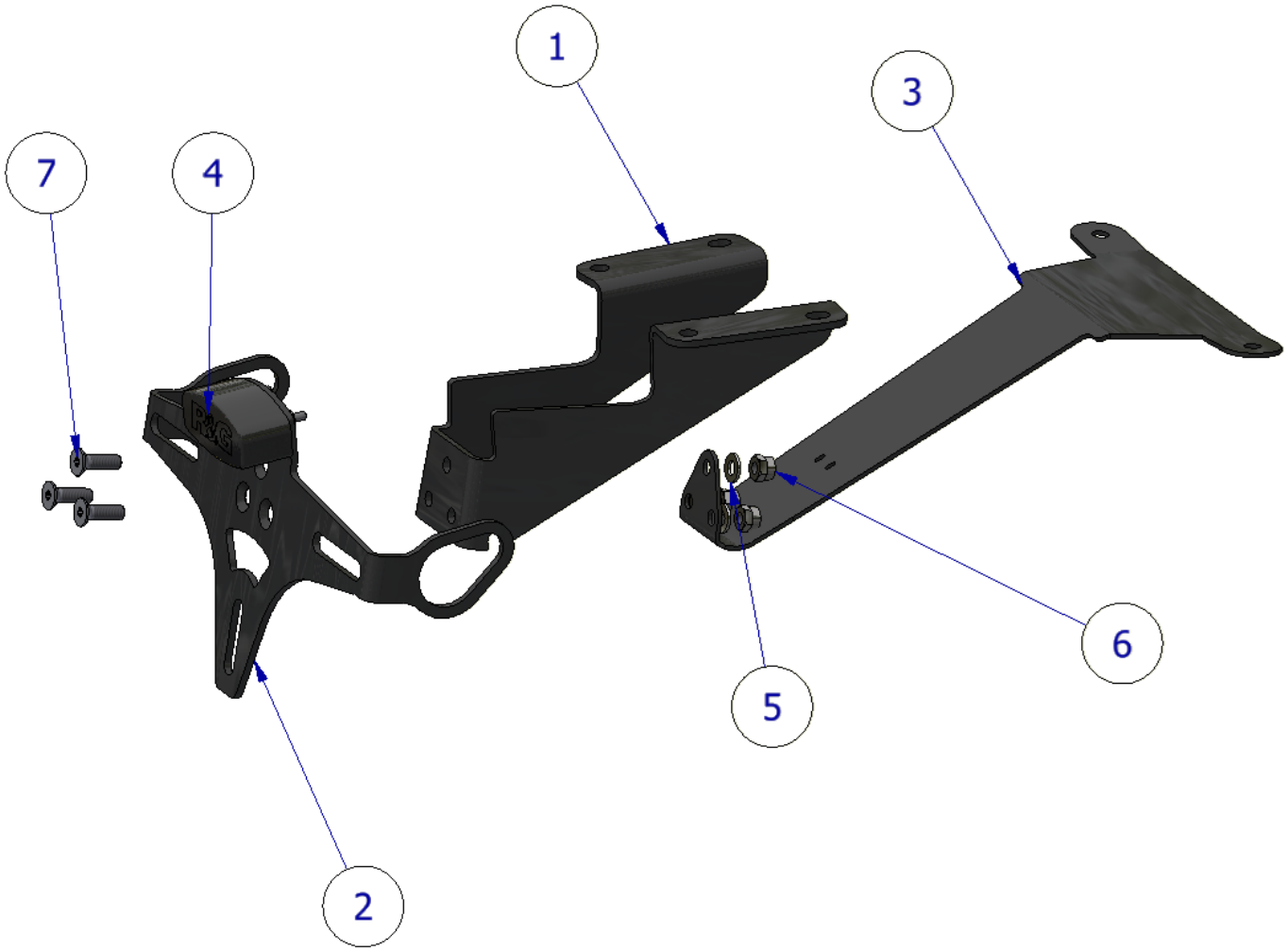

PHOTOS DE MONTAGE

Racing Technique Ltd T/A R&G
Unit 1, Shelley's Lane, East Worldham, Alton, Hampshire, GU34 3AQ
Tel: +44 (0)1420 89007 www.rg-racing.com Email: info@rg-racing.com

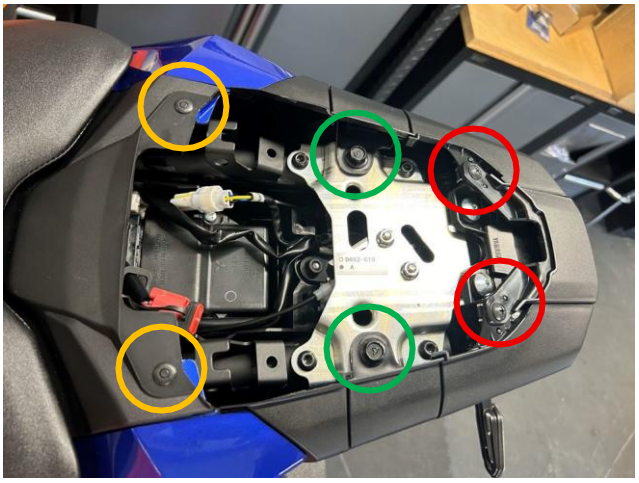

PHOTO 1

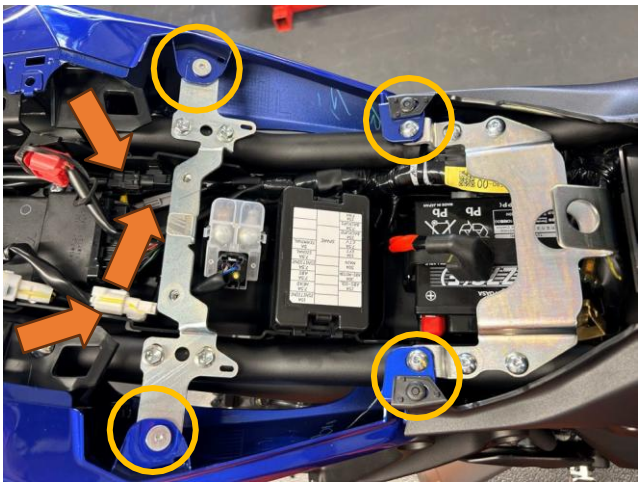

PHOTO 2



PHOTO 3



PHOTO 4

GUIDE DE MONTAGE

Notice de démontage :

- Retirez la selle arrière d'origine et tous les outils, etc. du compartiment de rangement.
- Retirez le panneau en plastique entre la selle principale et la selle passager en retirant les 2 boutons-pression entourés en orange sur la photo 1, puis retirez la selle principale.
- Retirez les boulons entourés en vert sur la photo 1.
- Retirez les 2 vis entourées en rouge sur la photo 1. Cela vous permettra de retirer le panneau central arrière au-dessus du feu stop.
- Retirez toutes les fixations entourées en orange sur les photos 2, 3 et 4. Cela vous permettra de retirer d'abord les 2 panneaux noirs fléchés sur la photo 3, puis les 2 carénages arrière. Veuillez noter que deux autres boulons argentés non représentés devront être retirés pour retirer les carénages arrière.

- Débranchez les 3 connecteurs fléchés sur la photo 2.
- L'unité d'origine peut ensuite être retirée en retirant les 4 boulons qui le maintiennent en place.
- Retirez les clignotants de l'arrière d'origine.

Notice d'assemblage :

- À l'aide de la gaine thermorétractable fournie, recouvrez les fils de l'éclairage de la plaque d'immatriculation.
- Fixez ensuite l'éclairage de la plaque d'immatriculation (article 4) au support de plaque d'immatriculation (article 2).
- Installez les clignotants d'origine de la même manière qu'ils ont été montés sur le feu arrière d'origine, en veillant à ce que le câblage passe par les trous situés sous le support principal.
- Comme indiqué sur le schéma de montage, vissez le support de plaque d'immatriculation au support principal et à la plaque de recouvrement à l'aide des boulons à tête fraisée (article 5), des rondelles (article 6) et des écrous nyloc (article 7) fournis.
- Les fils d'éclairage et de clignotants de la plaque d'immatriculation peuvent ensuite être fixés à l'aide du serre-câble et de la fente de la plaque de recouvrement.
- Fixez le connecteur de plaque d'immatriculation à l'extrémité des fils d'éclairage de la plaque d'immatriculation.

Notice de montage :

- Tout en insérant le câblage dans le passage de roue, maintenez le support arrière en place et, à l'aide des boulons d'origine retirés précédemment, fixez-le dans les trous de fixation d'origine.
- Serrez les boulons au couple requis.
- Présentez les panneaux de carénage arrière retirés précédemment à la moto, en vous assurant que leur dessous s'insère entre le passage de roue d'origine et la plaque de protection du support arrière. Fixez-les comme ils ont été retirés, en utilisant les boutons-pression d'origine pour maintenir la plaque de protection.
- Rebranchez les connecteurs des clignotants d'origine au faisceau de câbles.
- Remontez tous les panneaux d'origine et les selles comme ils ont été retirés..

IMPORTANT : SI VOUS MONTEZ UNE PLAQUE D'IMMATRICULATION DE GRANDE TAILLE ET LA PLACEZ BIEN EN BAS SUR LE SUPPORT DE PLAQUE D'IMMATRICULATION, IL Y A UN RISQUE QUE LA PLAQUE D'IMMATRICULATION FRAPPE LA ROUE ARRIÈRE SOUS UNE CHARGE LOURDE ET SUR DE GROSSES BOSSES SUR LA ROUTE. IL EST DE VOTRE RESPONSABILITÉ DE VÉRIFIER CETTE POSSIBILITÉ ET DE PRENDRE DES MESURES POUR ÉVITER. NE PAS VÉRIFIER CELA POURRAIT ENTRAÎNER DES BLESSURES GRAVES.

Racing Technique Ltd T/A R&G
Unit 1, Shelley's Lane, East Worldham, Alton, Hampshire, GU34 3AQ
Tel: +44 (0)1420 89007 www.rg-racing.com Email: info@rg-racing.com

CONSUMER NOTICE

The catalogue description and any exhibition of samples are only broad indications of the Products and R&G may make design changes which do not diminish their performance or visual appeal and supplying them in such state shall conform to the order. The Buyer acknowledges no representation or warranty (other than as to title) has been given or will apply to the Products other than those in R&G's order or confirmation and the Buyer confirms it has chosen the Products as being of merchantable quality and suitable for its particular purposes. Where R&G fits the Products or undertakes other services it shall exercise reasonable skill and care and rectify any fault free of charge unless the workmanship has been disturbed. The Buyer is responsible for ensuring that the warranty on the motorcycle is not affected by the fitting of the Products. On return of any defective Products R&G shall at its option either supply a replacement or refund the purchase money but shall not be liable if the Products have been modified or used or maintained otherwise than in accordance with R&G's or manufacturer's instructions and good engineering practice or if the defect arises from accident or neglect. Other than identified above and subject to R&G not limiting its liability for causing death and personal injury, it shall not be liable for indirect or consequential loss and otherwise its liability shall be limited to the amounts paid by the Buyer for the Products or the fitting or service concerned. These terms do not affect the Buyer's statutory rights.

R&G RACING RETURNS POLICY (NON-FAULTY GOODS)

Returns must be pre-authorised (if not pre-authorised the return will be rejected). Goods may only be returned direct to us if they were purchased direct from us (customer must prove if necessary). Otherwise to be returned to original vendor. Goods must be in re-sellable condition, in the opinion of R&G Racing. All returns are subject to a 25% restocking and handling fee (25% of the gross value exc. P&P – at the prevailing price at time of purchase). The customer must pay any and all carriage charges. No returns of discontinued products, unless within 14 days of purchase. This policy does not affect your statutory rights and does not refer to